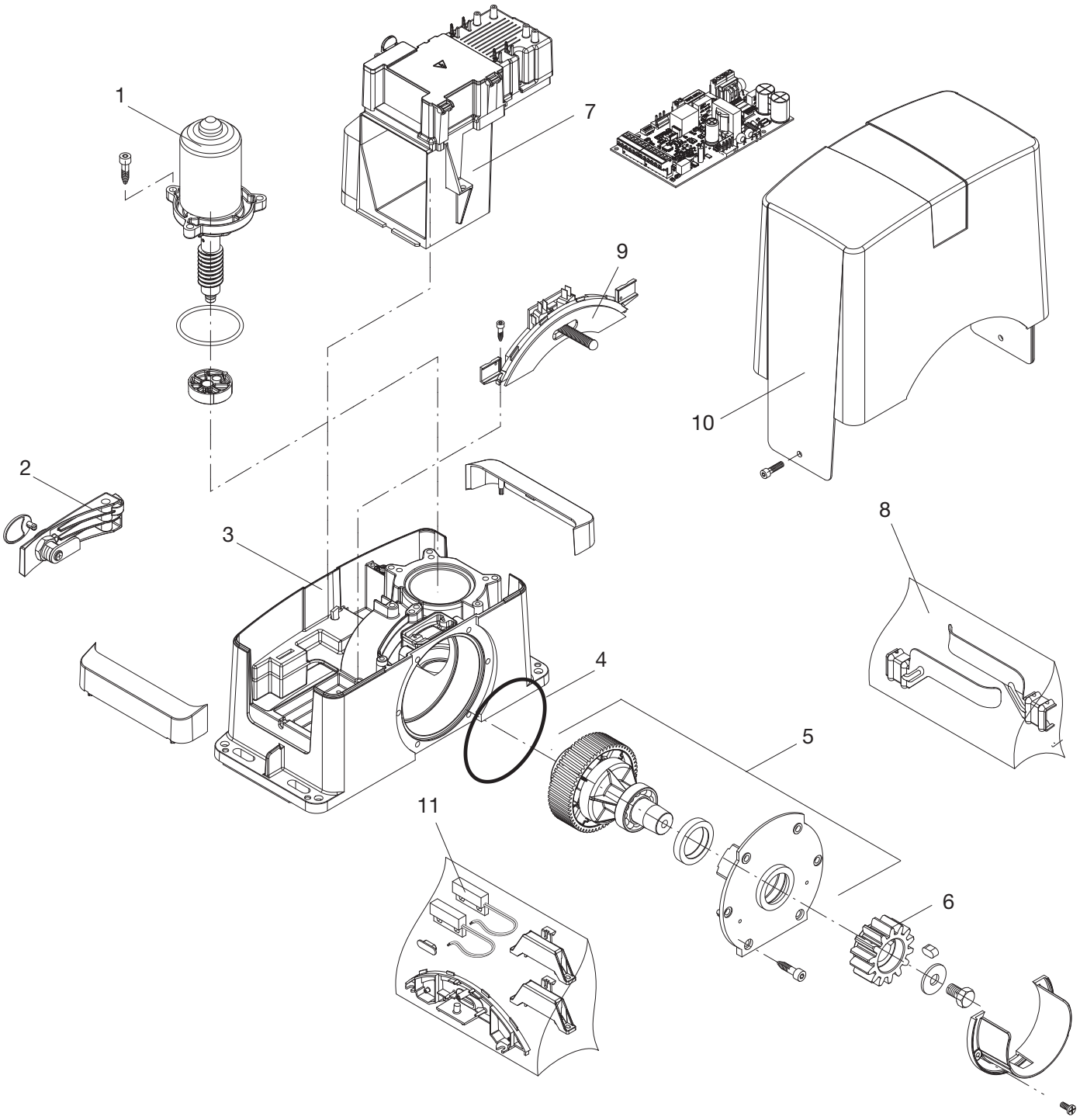

Ref.	BULL 424 SW	Note
1	968601942	
2	968601943	
3	968601944	
4	9686421	
5	968601945	
6	9686414	
7	968601947	
8	9688174	
9	9686329	
10	9686427	
11	9688102	BULL____S